CORROSION RESISTANT PRODUCTS

STAINLESS STEEL STAND-OUT FLANGE BRACKET
Stainless Steel Insert
SSUCFBSO 200 Series

Normal Duty
Set Screw Locking
Inch Dimension

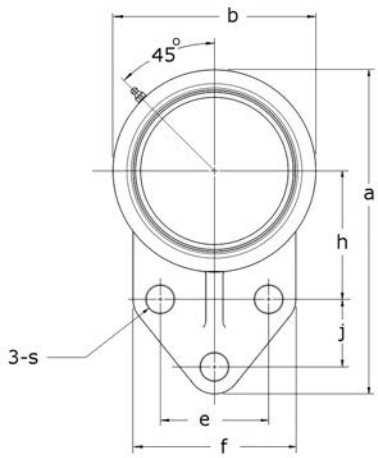

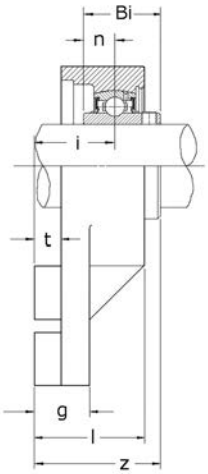

Unit No.	Shaft Dia. Inch	Shaft Dia. mm	a	h	e	j	i	g	l	s	b	f	t	z	Bi	n	Bolt Size	Bearing No.	Housing No.	Weight lbs / kg
			Dimensions (inch/*mm*)																	
SSUCFBSO204		20																SSUC204		
SSUCFBSO201-8	1/2		4-1/4	1-11/16	1-1/2	7/8	1-5/16	27/32	1-25/32	25/64	2-1/2	2-3/8	1/2	2-1/32	1.219	0.500	5/16	SSUC201-8	SSFBSO204	1.20
SSUCFBSO202-10	5/8		*108.0*	*42.9*	*38.1*	*22.2*	*33.3*	*21.4*	*45.2*	*9.9*	*63.5*	*60.3*	*12.7*	*51.6*	*31.0*	*12.7*	*M8*	SSUC202-10		*0.55*
SSUCFBSO204-12	3/4																	SSUC204-12		
SSUCFBSO205		25																SSUC205		
SSUCFBSO205-14	7/8		4-3/4	1-13/16	1-5/8	1-1/8	1-3/8	7/8	1-7/8	25/64	2-3/4	2-17/32	1/2	2-5/32	1.343	0.563	5/16	SSUC205-14		1.85
SSUCFBSO205-15	15/16		*120.7*	*46.0*	*41.3*	*28.6*	*34.9*	*22.2*	*47.6*	*9.9*	*69.9*	*64.3*	*12.7*	*54.8*	*34.1*	*14.3*	*M8*	SSUC205-15	SSFBSO205	*0.84*
SSUCFBSO205-16	1																	SSUC205-16		
SSUCFBSO206		30																SSUC206		
SSUCFBSO206-17	1-1/16																	SSUC206-17		
SSUCFBSO206-18	1-1/8		5-25/64	2-1/16	1-7/8	1-1/4	1-7/16	7/8	1-31/32	25/64	3-1/4	2-3/4	1/2	2-5/16	1.500	0.625	5/16	SSUC206-18	SSFBS0206	2.70
SSUCFBSO206-19	1-3/16		*136.9*	*52.4*	*47.6*	*31.8*	*36.5*	*22.2*	*50.0*	*9.9*	*82.6*	*69.9*	*12.7*	*58.7*	*38.1*	*15.9*	*M8*	SSUC206-19		*1.23*
SSUCFBSO206-20	1-1/4S																	SSUC206-20		
SSUCFBSO207		35																SSUC207		
SSUCFBSO207-20	1-1/4																	SSUC207-20		
SSUCFBSO207-21	1-5/16		6	2-3/8	2	1-1/4	1-1/2	1-1/32	2-1/16	1/2	3-3/4	3	1/2	2-1/2	1.689	0.689	3/8	SSUC207-21	SSFBSO207	3.75
SSUCFBSO207-22	1-3/8		*152.4*	*60.3*	*50.8*	*31.8*	*38.1*	*26.2*	*52.4*	*12.7*	*95.3*	*76.2*	*12.7*	*63.5*	*42.9*	*17.5*	*M10*	SSUC207-22		*1.70*
SSUCFBSO207-23	1-7/16																	SSUC207-23		
SSUCFBSO208		40	6-15/32	2-3/8	1-31/32	1-5/8	1-9/16	1-1/8	2-1/8	7/16	3-15/16	3-1/16	1/2	2-3/4	1.937	0.750	3/8	SSUC208	SSFBSO208	5.50
SSUCFBSO208-24	1-1/2		*164.3*	*60.3*	*50.0*	*41.3*	*39.7*	*28.6*	*54.0*	*11.1*	*100.0*	*77.8*	*12.7*	*69.8*	*49.2*	*19.0*	*M10*	SSUC208-24		*2.50*
SSUCFBSO208-25	1-9/16																	SSUC208-25		