CORROSION RESISTANT PRODUCTS

THERMOPLASTIC FLANGE BRACKET - Stainless Steel Insert
SSUCTPFB 200 Series

Normal Duty
Set Screw Locking
Inch Dimension

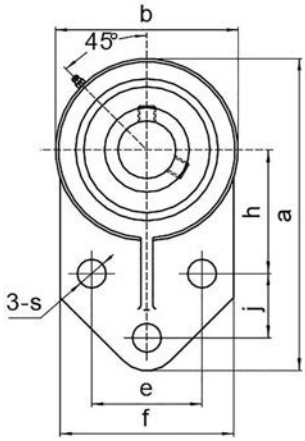

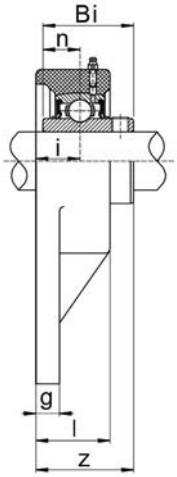

Unit No.	Shaft Dia. In.	Shaft Dia. mm	Dimensions a	h	e	j	i	g	l	s	b	f	z	Bi	n	Bolt Size	Bearing No.	Housing No.	Weight Lbs *kg*
SSUCTPFB201-8	1/2																SSUC201-8		
202-10	5/8		**4-1/4**	**1-11/16**	**1-1/2**	**7/8**	**5/8**	**29/64**	**1-3/64**	**27/64**	**2-1/2**	**2-7/16**	**1-11/32**	**1.219**	**0.500**	**5/16**	202-10	TPFB204	**0.57**
204		20	*108.0*	*42.9*	*38.1*	*22.2*	*15.9*	*11.5*	*26.6*	*10.7*	*63.5*	*61.9*	*34.1*	*31.1*	*12.7*	M8	204		*0.26*
204-12	3/4																204-12		
SSUCTPFB205		25															SSUC205		
205-14	7/8		**4-3/4**	**1-13/16**	**1-5/8**	**1-1/8**	**21/32**	**29/64**	**1-7/64**	**27/64**	**2-3/4**	**2-1/2**	**1-7/16**	**1.343**	**0.563**	**5/16**	205-14	TPFB205	**0.68**
205-15	15/16		*120.7*	*46.0*	*41.3*	*28.6*	*16.7*	*11.5*	*28.2*	*10.7*	*69.9*	*63.5*	*36.5*	*34.1*	*14.3*	M8	205-15		*0.31*
205-16	1																205-16		
SSUCTPFB206		30															SSUC206		
206-17	1-1/16																206-17		
206-18	1-1/8		**5-29/64**	**2-1/16**	**1-7/8**	**1-1/4**	**47/64**	**17/32**	**1-1/4**	**27/64**	**3-9/32**	**3**	**1-39/64**	**1.500**	**0.626**	**5/16**	206-18	TPFB206	**1.08**
206-19	1-3/16		*138.5*	*52.4*	*47.6*	*31.8*	*18.6*	*13.5*	*31.8*	*10.7*	*83.3*	*76.2*	*40.9*	*38.1*	*15.9*	M8	206-19		*0.49*
206-20	1-1/4S																206-20		
SSUCTPFB207		35															SSUC207		
207-20	1-1/4																207-20		
207-21	1-5/16		**6-3/16**	**2-3/8**	**2**	**1-1/4**	**13/16**	**41/64**	**1-1/4**	**33/64**	**3-3/4**	**3-1/2**	**1-53/64**	**1.689**	**0.689**	**3/8**	207-21	TPFB207	**1.56**
207-22	1-3/8		*157.2*	*60.3*	*50.8*	*31.8*	*20.6*	*16.3*	*31.8*	*13.1*	*95.3*	*88.9*	*46.4*	*42.9*	*17.5*	M10	207-22		*0.71*
207-23	1-7/16																207-23		