WIDE INNER RING BEARINGS

SSSER 200 Series

Cylindrical OD
Snap Ring

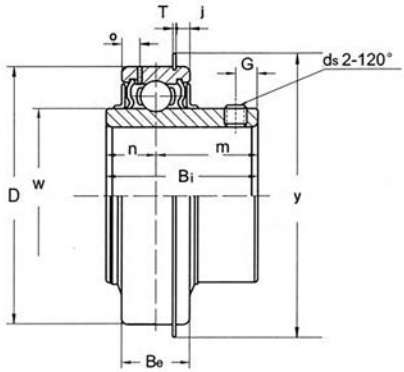

Unit No.	Shaft Dia. Inch	Dimensions inch / *mm*												Basic Load Ratings Lbf / *N*		Weight Lbs *kg*
		D	Bi	Be	n	m	W	o	T	j	G	ds	Y	Dynamic C	Static Co	
SSSER201-8	1/2	1.85039 *47.0*	1-1/4 *31.8*	5/8 *15.9*	29/64 *11.5*	49/64 *19.4*	1-1/8 *28.6*	0.157 *4.0*	0.053 *1.35*	0.097 *2.46*	0.197 *5.0*	1/4-28UNF	2-5/64 *52.8*	2900 *12890*	6490 *1460*	0.55 *0.25*
SSSER204-12	3/4															
SSSER205-16	1	2.04724 *52.0*	1-3/8 *34.9*	3/4 *19.1*	33/64 *13.1*	55/64 *21.8*	1-11/32 *34.1*	0.205 *5.2*	0.053 *1.35*	0.097 *2.46*	0.220 *5.6*	1/4-28UNF	2-9/32 *57.9*	3150 *14000*	1700 *7560*	0.68 *0.31*
SSSER206-20	1-1/4S	2.44094 *62.0*	1-1/2 *38.1*	7/8 *22.2*	5/8 *15.9*	7/8 *22.2*	1-19/32 *40.5*	0.220 *5.6*	0.075 *1.91*	0.125 *3.28*	0.220 *5.6*	1/4-28UNF	2-21/32 *67.5*	4390 *19520*	2510 *11160*	0.92 *0.42*
SSSER207-20	1-1/4	2.83465 *72.0*	1-11/16 *42.9*	15/16 *23.8*	11/16 *17.5*	1 *25.4*	1-27/32 *46.8*	0.220 *5.6*	0.075 *1.91*	0.125 *3.28*	0.250 *6.4*	5/16-24UNF	3-3/32 *78.6*	5770 *25650*	3450 *15340*	1.36 *0.62*
SSSER207-23	1-7/16															
SSSER208-24	1-1/2	3.14961 *80.0*	1-15/16 *49.2*	1-3/32 *27.8*	3/4 *19.1*	1-3/16 *30.2*	2-1/16 *52.4*	0.250 *6.4*	0.075 *1.91*	0.125 *3.28*	0.313 *7.9*	5/16-24UNF	3-13/32 *86.5*	6500 *28900*	17120 *3850*	2.00 *0.91*