POLY-GUARD IP69K SEAL KITS
for KML Stainless Steel Stand-Out Flange Units
Through Shaft Application with SSFSO, SSFLSO, SSFBSO



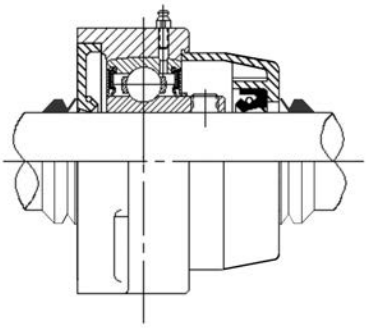

Seal Kit Part Number	Shaft Dia.		Shaft Type	Kit Components		
	Inch	*mm*		**Open** Cap - 1 pc.	Back Seal - 1 pc.	V-Ring - 2 pcs.
FIP69K-20 OC MM		*20*	through shaft	OC204 Open Cap with seal	BS204	VS020 20mm V-ring
FIP69K-12 OC	3/4			OC204-12 Open Cap with seal	BS204-12	
FIP69K-25 OC MM		*25*	through shaft	OC205 Open Cap with seal	BS205	VS025 25mm V-ring
FIP69K-16 OC	1			OC205-16 Open Cap with seal	BS205-16	
FIP69K-30 OC MM		*30*	through shaft	OC206 Open Cap with seal	BS206	VS030 30mm V-ring
FIP69K-19 OC	1-3/16			OC206-19 Open Cap with seal	BS206-19	
FIP69K-20S OC	1-1/4S			OC206-20 Open Cap with seal	BS206-20	VS032 32mm V-ring
FIP69K-35 OC MM		*35*	through shaft	OC207 Open Cap with seal	BS207	VS035 35mm V-ring
FIP69K-20 OC	1-1/4			OC207-20 Open Cap with seal	BS207-20	VS032 32mm V-ring
FIP69K-22 OC	1-3/8			OC207-22 Open Cap with seal	BS207-22	VS035 35mm V-ring
FIP69K-23 OC	1-7/16			OC207-23 Open Cap with seal	BS207-23	
FIP69K-40 OC MM		*40*	through shaft	OC208 Open Cap with seal	BS208	VS040 40mm V-ring
FIP69K-24 OC	1-1/2			OC208-24 Open Cap with seal	BS208-24	VS038 38mm V-ring
FIP69K-25 OC	1-9/16			OC208-25 Open Cap with seal	BS208-25	VS040 40mm V-ring